Queen Mary
University of London
Science and Engineering

EBU4202: Digital Circuit Design

Hazards and Glitches

Dr. Md Hasanuzzaman Sagor (Hasan)
Dr. Chao Shu (Chao)
Dr. Farha Lakhani (Farha)
Dr. Fatma Benkhelifa

School of Electronic Engineering and Computer Science,
Queen Mary University of London,
London, United Kingdom.

Timing Hazards and Output Glitches

- *Output glitch*: A momentary unexpected output change (short pulse) when an input changes; usually caused by gate propagation delays.
- *Hazards*: A timing hazard exists in a combinational circuit when it produces an *output glitch* when one or more inputs change.
  - Static Hazards (*static-1* and *static-0*): when 1 input variable changes, the output changes momentarily before stabilising on the correct value.
    - Can usually be fixed by adding redundant logic
  - Dynamic Hazards: possibility of an output changing more than once as a result of a single input change.

Timing Hazards and Output Glitches

- Example of *static-1 hazard*

A \ BC	00	01	11	10
0	0	0	1	0
1	1	1	1	0

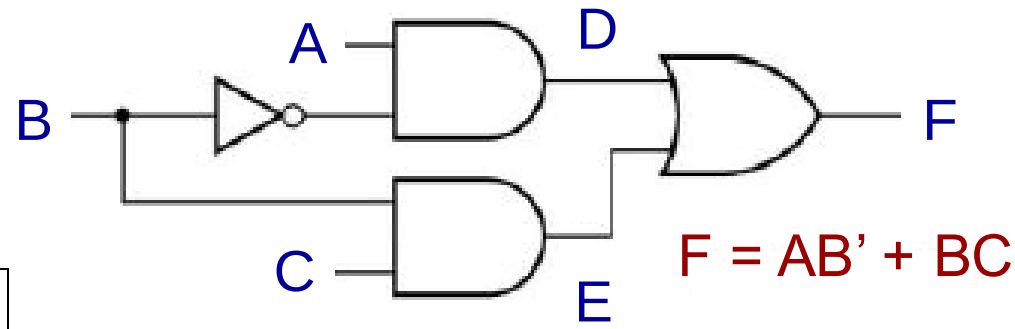

1-hazard

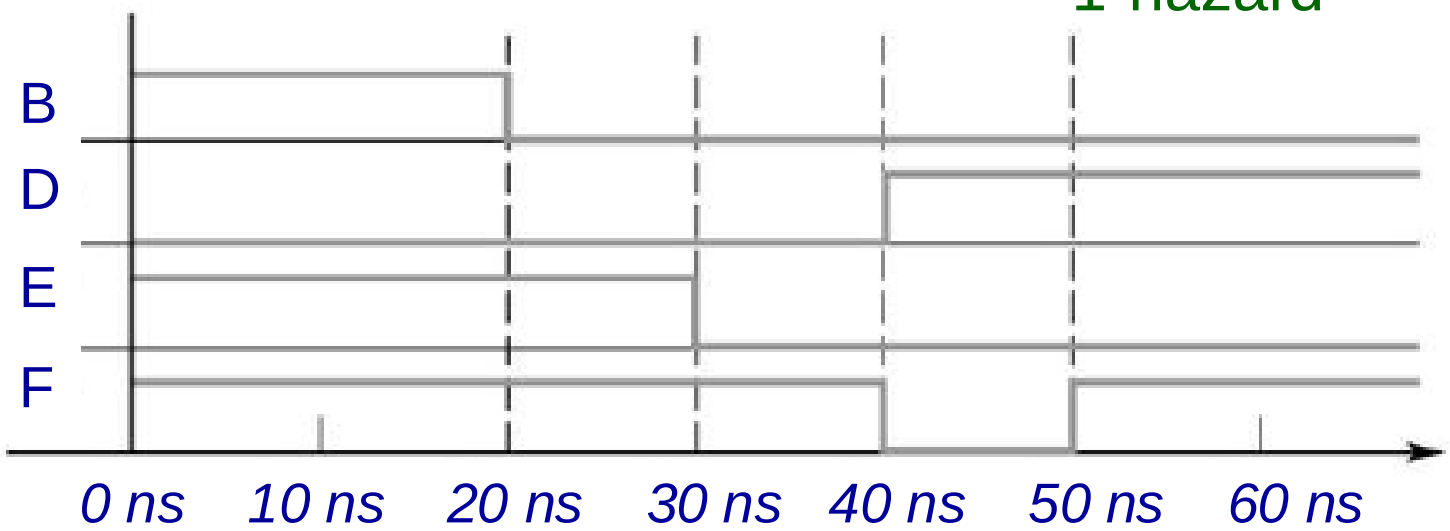

Timing Hazards and Output Glitches

- Example of *static-1 hazard (cont.)*:

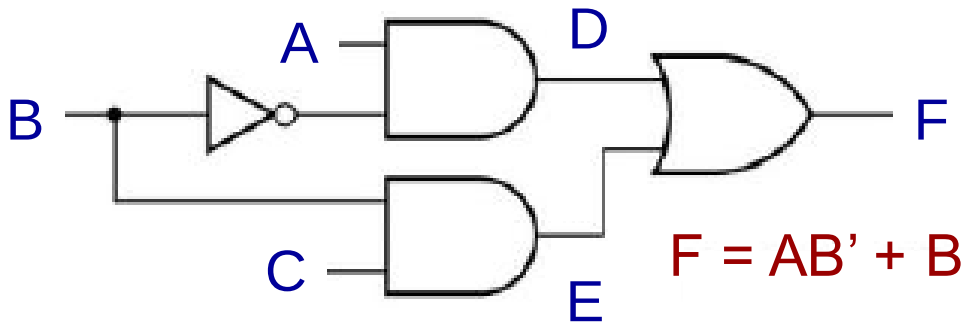

A \ BC	00	01	11	10
0	0	0	1	0
1	1	1	1	0

F = AB’ + BC

removing the *static-1 hazard*

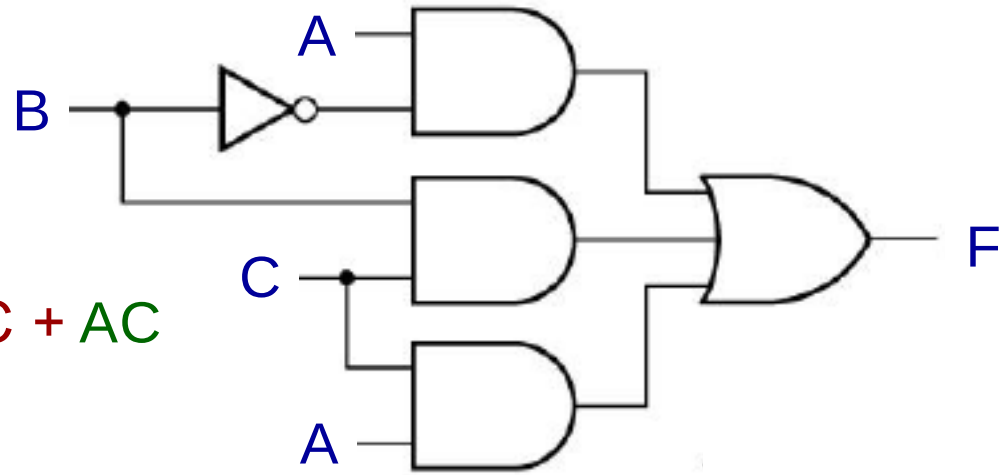

F = AB’ + BC + AC

Static Hazards

- A **static-1 hazard** is a pair of input combinations that: (i) differ in only one input variable and (ii) both give a 1 output; such that it is possible for a momentary 0 output to occur during a transition in the differing input variable.

- A **static-0 hazard** is a pair of input combinations that: (i) differ in only one input variable and (ii) both give a 0 output; such that it is possible for a momentary 1 output to occur during a transition in the differing input variable.

Timing Hazards

Question: Is there any static hazard on the combinational circuit shown in the Karnaugh Maps? How can we eliminate this?

A \ BC	00	01	11	10
0	0	0	1	1
1	0	1	1	0

Timing Hazards

$F = A' . B + A . C$

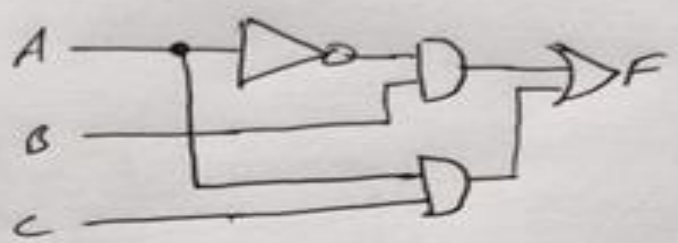

A \ BC	00	01	11	10
0	0	0	1	1
1	0	1	1	0

F

STATIC – 1 HAZARD ('RACE' HAZARD)

IF ONE OF THE AND GATE OUTPUTS GOES TO 0 BEFORE THE OTHER.

Timing Hazards

Is there any static hazard on the combinational circuit shown in the Karnaugh Maps? How can we eliminate this?

Answer: add a redundant group:

A \ BC	00	01	11	10
0	0	0	1	1
1	0	1	1	0

Timing Hazards

$$F = A'.B + A.C + B.C$$

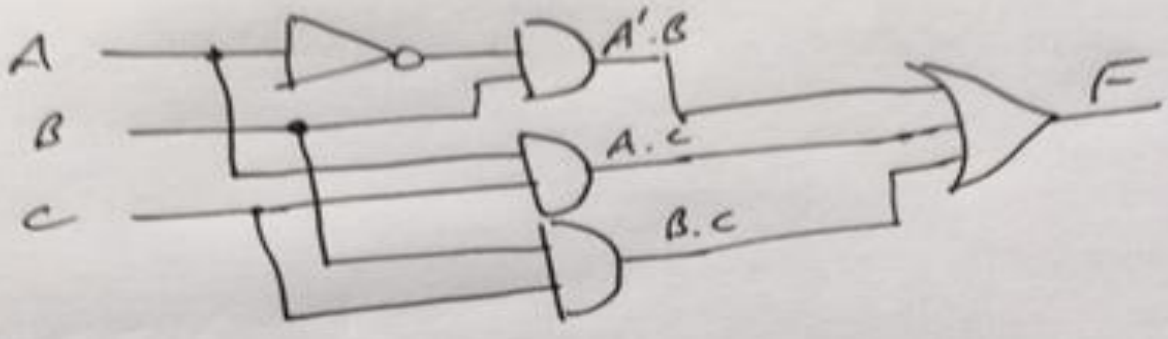

STATIC – 1 HAZARD ELIMINATED

A \ BC	00	01	11	10
0	0	0	1	1
1	0	1	1	0

F

Timing Hazards

Example: F = X'Y'Z + X'YZ' + XYZ = (X ⊕ Y)'.Z + (X + Z)'.Y

Three input combinations give output 1.

XYZ = 001

XYZ = 010

XYZ = 111

X \ YZ	00	01	11	10
0	0	1	0	1
1	0	0	1	0

If we investigate any two input combinations, we see that there are two variable changes. So, no Static-1 Hazard.

But according to the static-0 definition, there is a possibility to exist a Static-0 hazard (for input combinations XYZ = 000, 100). However, a properly designed two-level SoPs (AND-OR) circuit has no Static-0 hazard. You can draw the corresponding timing diagram for both circuits and check if there is any hazard.

Queen Mary
University of London

..next slide…
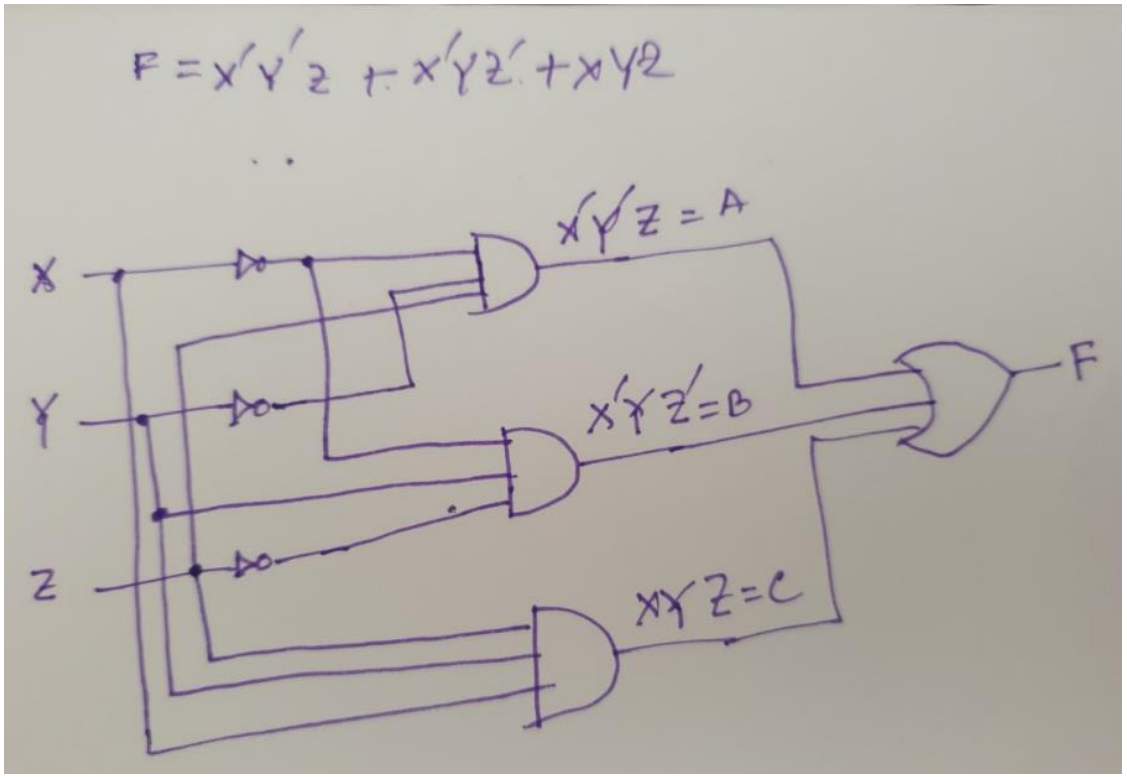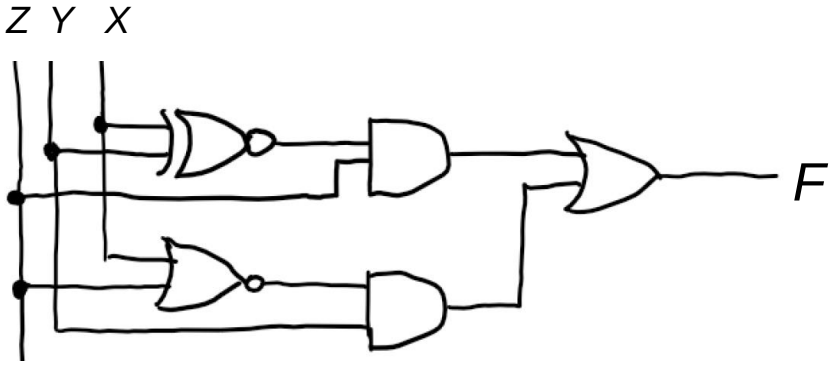
Timing Hazards